April 1999

FUJITSU

SPLIT TYPE AIR CONDITIONER (50Hz)

DUCT type

SERVICE MANUAL

Models	Indoor unit	Outdoor unit
	ARY30ALA	AOY30ABJL
	ARY30RLA	AOY30RBJL

CONTENTS

SPECIFICATIONS 1
CIRCUIT DIAGRAM 2
P. C. BOARD LAYOUTS 9
REFRIGERANT SYSTEM DIAGRAM 10
DISASSEMBLY ILLUSTRATION 12
PARTS LIST 24

splitoff.ru

Большая библиотека технической документации
http://splitoff.ru/tehn-doc.html
каталоги, инструкции, сервисные мануалы, схемы.

SPECIFICATIONS

INDOOR UNIT		ARY30ALA	ARY30RLA
OUTDOOR UNIT		AOY30ABJL	AOY30RBJL
COOLING CAPACITY	(kW)	8.60 - 8.80	8.60 - 8.80
HEATING CAPACITY	(kW)	——	8.80 - 9.10

ELECTRICAL SPECIFICATIONS

POWER SUPPLY (V)		220 - 240	
FREQUENCY (Hz)		50	
RUNNING CURRENT	COOLING	15.8 - 16.3	16.0 - 16.5
	HEATING	——	14.1 - 14.6
INPUT (kW)	COOLING	3.30 - 3.40	3.35 - 3.45
	HEATING	——	2.90 - 3.00
EER (kW/kW)	COOLING	2.61 - 2.59	2.57 - 2.55
	HEATING	——	3.03 - 3.03
MOISTURE REMOVAL (ℓ/hr)		4.0	4.0
AIR CIRCULATION-Hi (m/hr)		1,650	1,650

COMPRESSOR

TYPE	Hermetic type, 2 pole, 3 - phase, Induction motor	
CODE	CRLQ-0350-TFD	CRPQ-0450-TFD

FAN MOTOR		ARY30ALA	AOY30RLA	ARY30ABJL	ARY30RBJL
TYPE		MFB-45BT		MFB-30DF	
POWER SUPPLY	(V)	220 - 240			
HI-SPEED	(r.p.m)	1,240		760	
MED-SPEED	(r.p.m)	1,140		——	
LO-SPEED	(r.p.m)	1,040		470	

DIMENSIONS

HEIGHT	(mm)	270	900
WIDTH	(mm)	1,210	900
DEPTH	(mm)	700	350

WEIGHT

GROSS WEIGHT	(kg)	58	96	97
NET WEIGHT	(kg)	43	84	85

REFRIGERANT CHARGING

PIPE LENGTH		5 m(16 ft)	10 m(33 ft)	15 m(49 ft)	20 m(66 ft)	25 m(82 ft)	30 m(99 ft)
FULL CHARGE AMOUNT	ARY30ALA	2,650g(93.5 oz.)	2,735g(96.5 oz.)	2,820g(99.5 oz.)	2,905g(102.5 oz.)	2,990g(105.5 oz.)	3,075g(108.5 oz.)
	ARY30RLA	2,850g(100.5 oz.)	3,100g(109.3 oz.)	3,350g(118.2 oz.)	3,600g(127.0 oz.)	3,850g(135.8 oz.)	

Note :
- Between 5 m and 30 m, when using a connection pipe other then that in the table, charge additional refrigerant with 17 g(0.6 oz.)/1 m(3.3 ft) for ARY30ALA, 50 g(1.76 oz.)/1 m(3.3 ft) for ARY30ALA as the criteria.
- The above list shows values at the external static pressure of 12mm Aq. (118 Pa.)

Все каталоги и инструкции здесь: http://splitoff.ru/tehn-doc.html

CIRCUIT DIAGRAM

Models : ARY36ALA3, ARY36ALB3/AOY36ACA3L
ARY45ALA3, ARY45ALB3/AOY45ACA3L

INDOOR UNIT

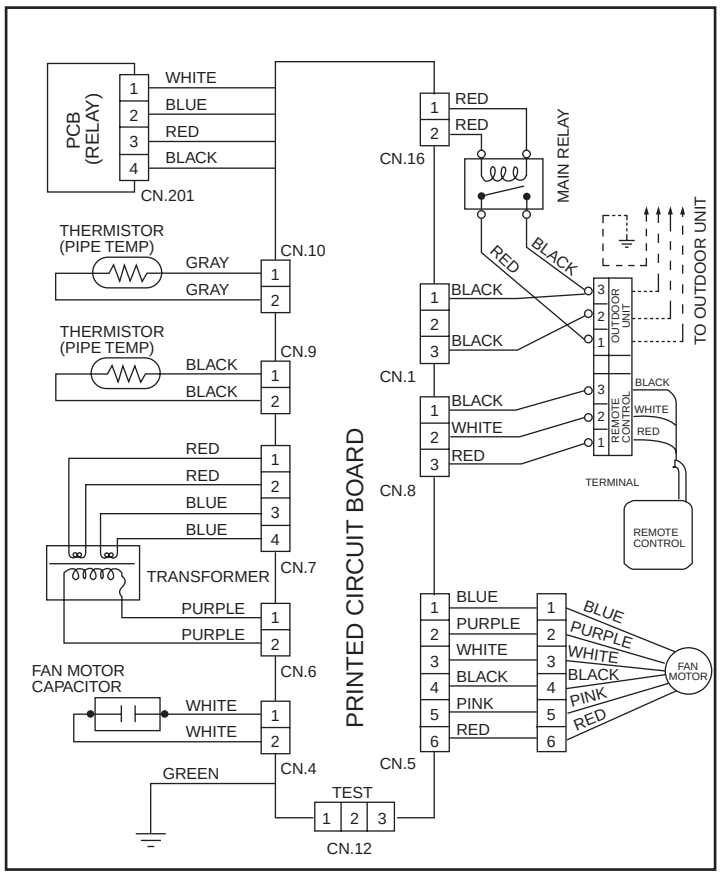

FAN MOTOR CAPACITOR	10μF

OUTDOOR UNIT

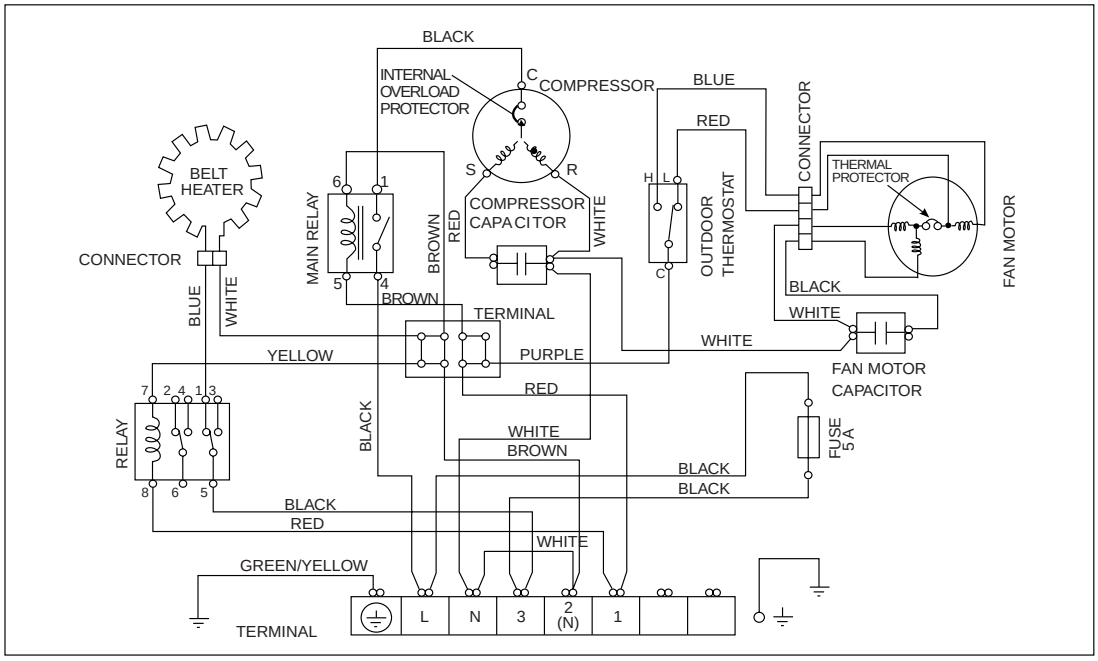

FAN MOTOR CAPACITOR	4μF
COMPRESSOR CAPACITOR	46μF

Все каталоги и инструкции здесь: http://splitoff.ru/tehn-doc.html

Models : ARY36RLA3, ARY36RLB3/AOY36RCB3L
ARY45RLA3, ARY45RLB3/AOY45RCB3L

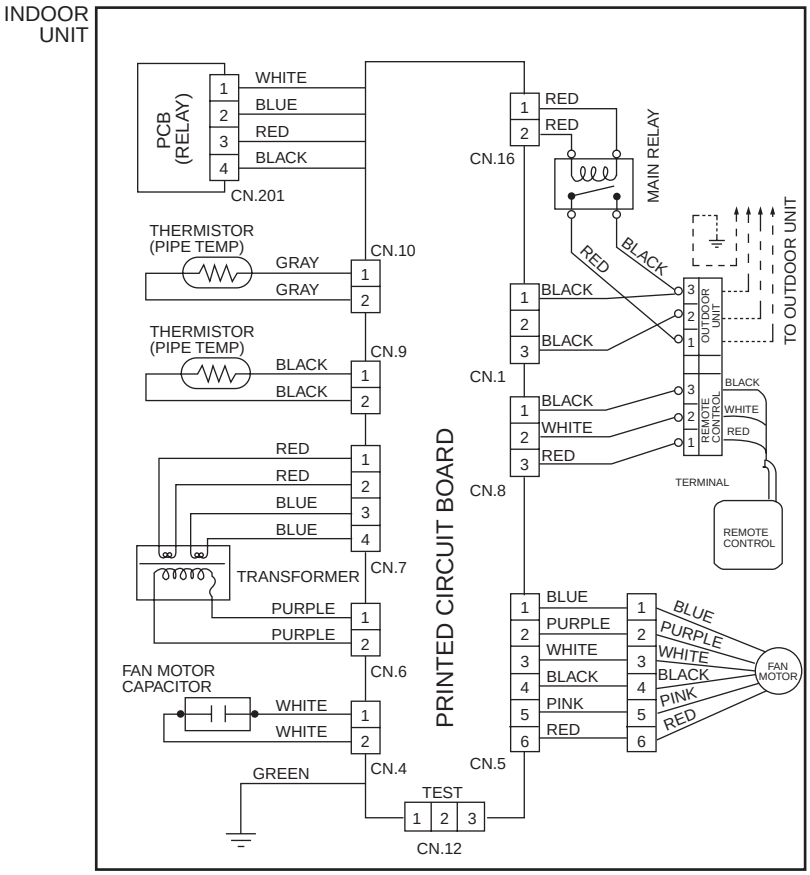

FAN MOTOR CAPACITOR	10μF

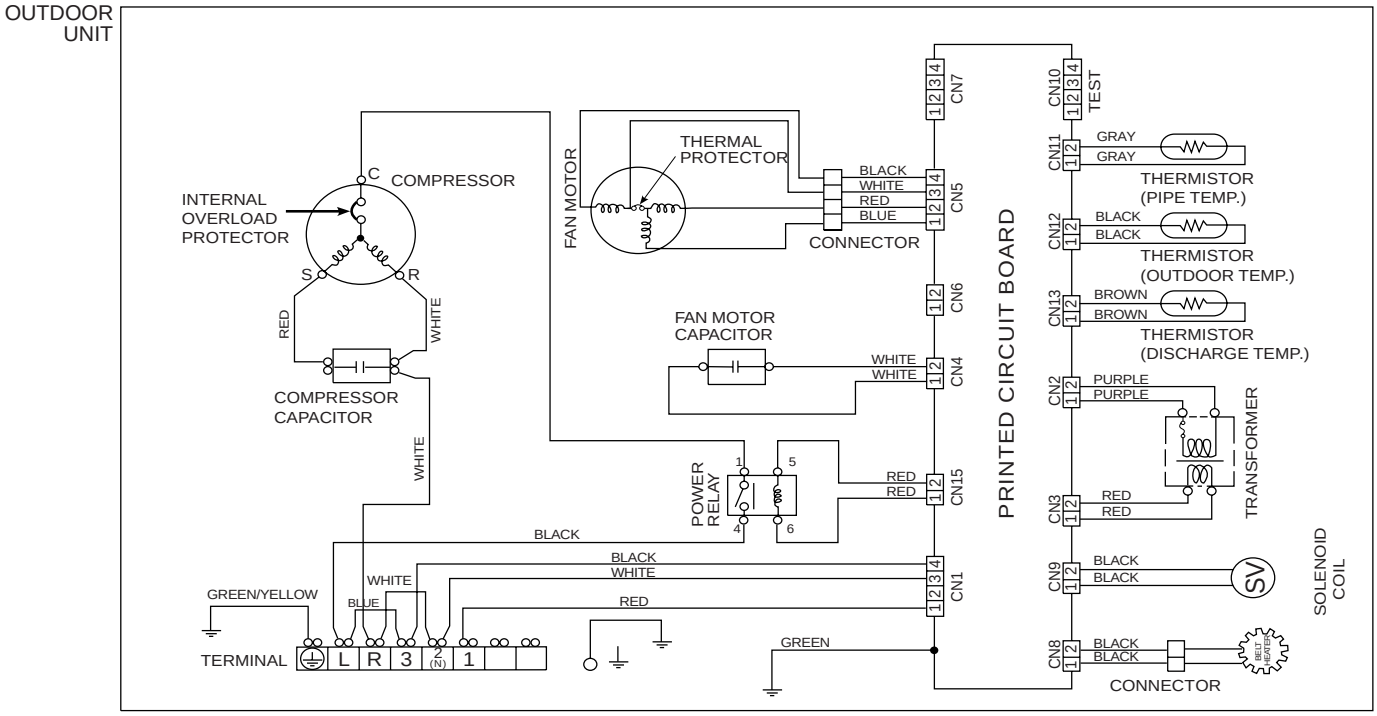

FAN MOTOR CAPACITOR	4μF
COMPRESSOR CAPACITOR	46μF

Все каталоги и инструкции здесь: http://splitoff.ru/tehn-doc.html

REMOTE CONTROL UNIT
CIRCUIT DIAGRAM

Models : ARY30ALA

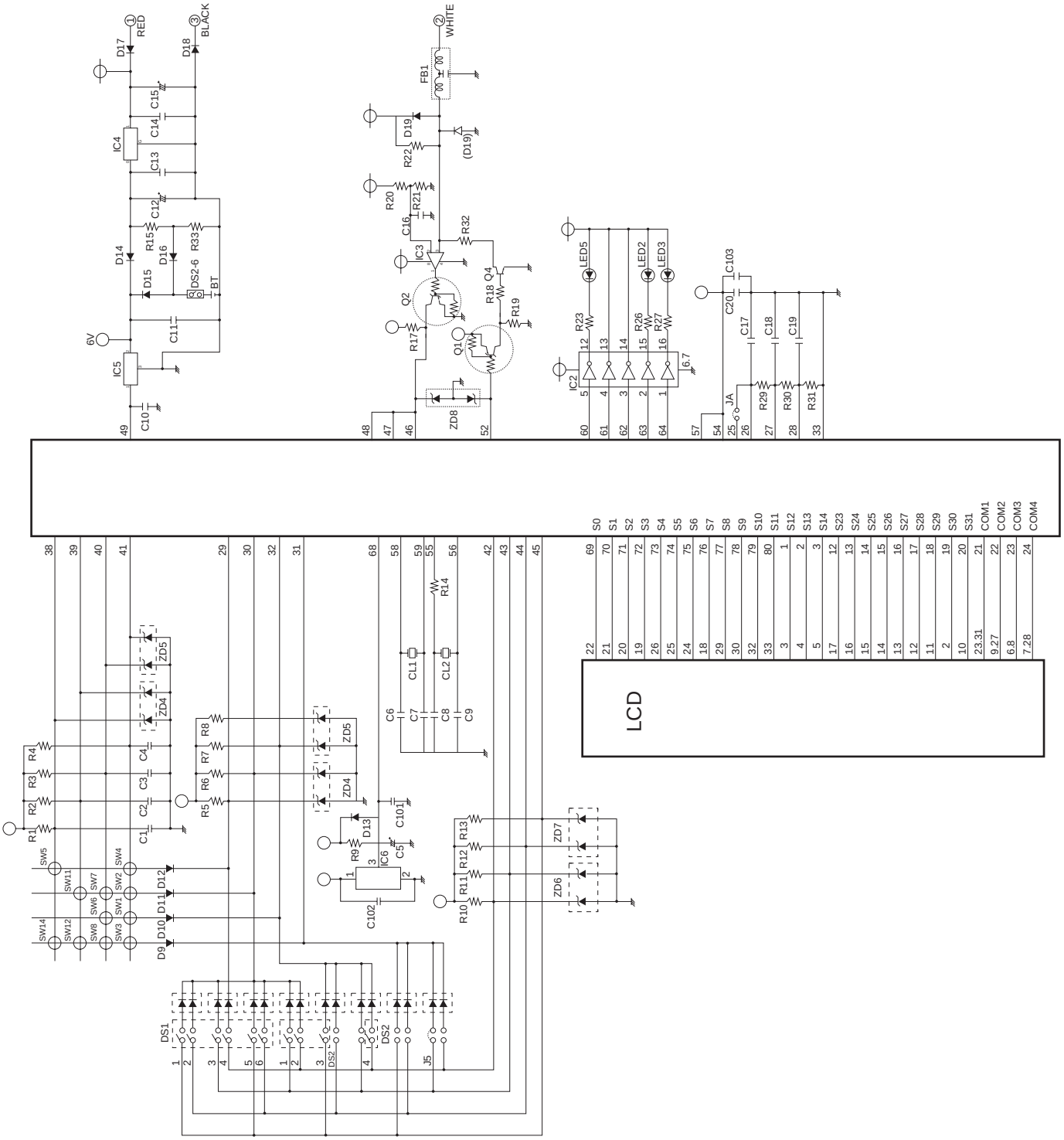

Все каталоги и инструкции здесь: http://splitoff.ru/tehn-doc.html

Models : ARY30RLA

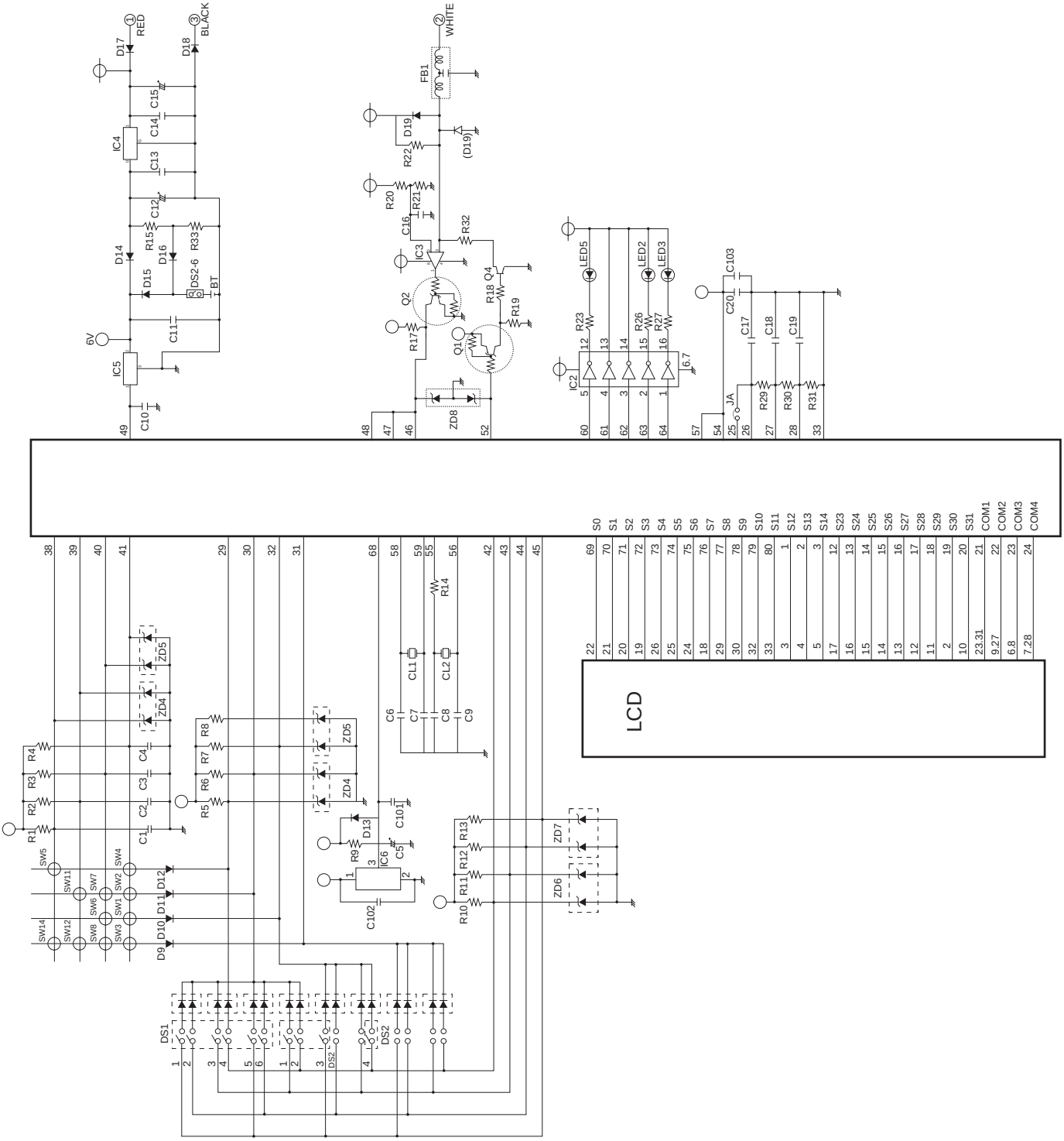

Все каталоги и инструкции здесь: http://splitoff.ru/tehn-doc.html

INDOOR PRINTED CIRCUIT BOARD
CIRCUIT DIAGRAM

Models : ARY30ALA

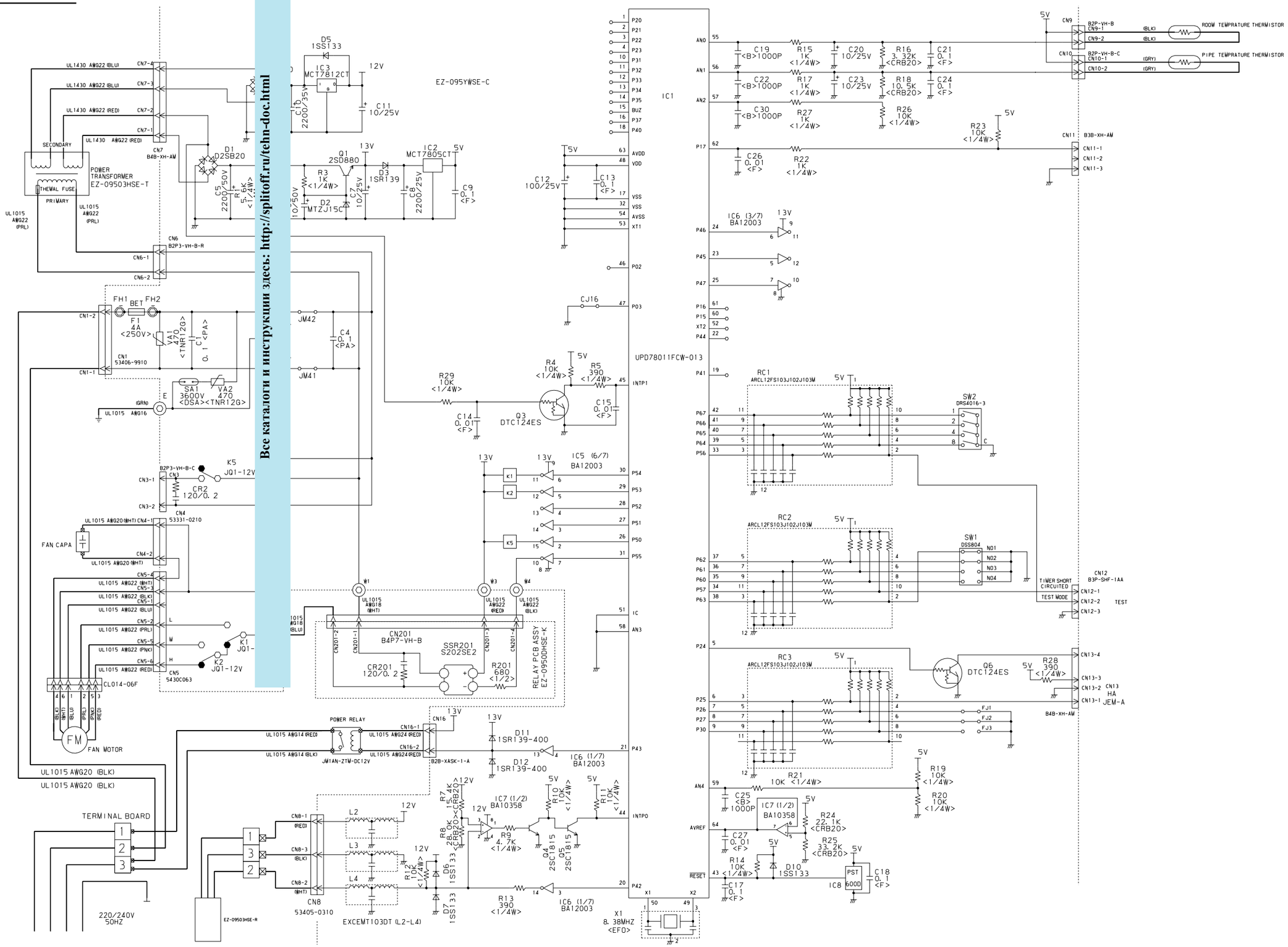

Все каталоги и инструкции здесь: http://splitoff.ru/tehn-doc.html

Models : ARY30RLA

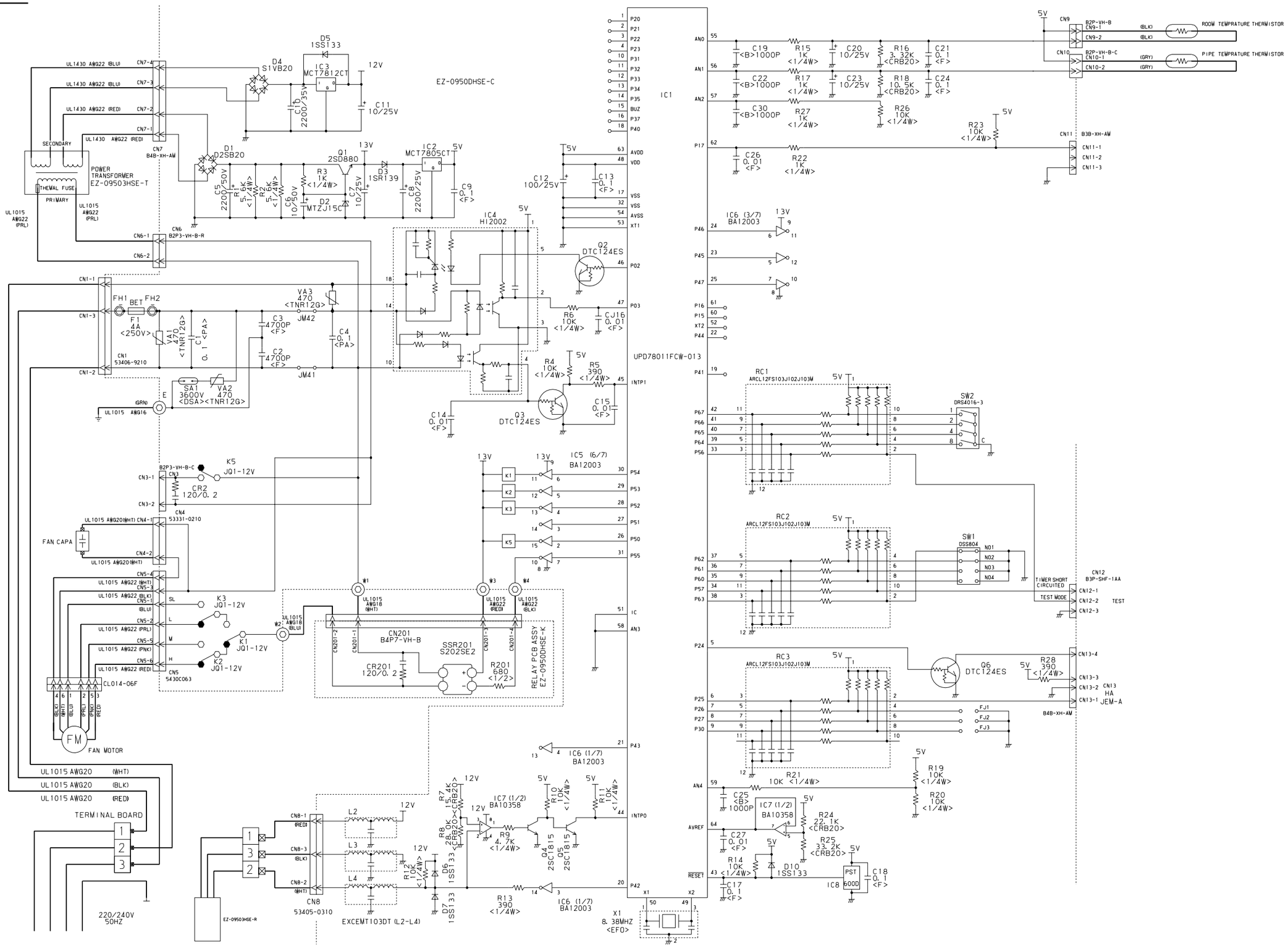

OUTDOOR PRINTED CIRCUIT BOARD
CIRCUIT DIAGRAM

Models : ARY30RBJL

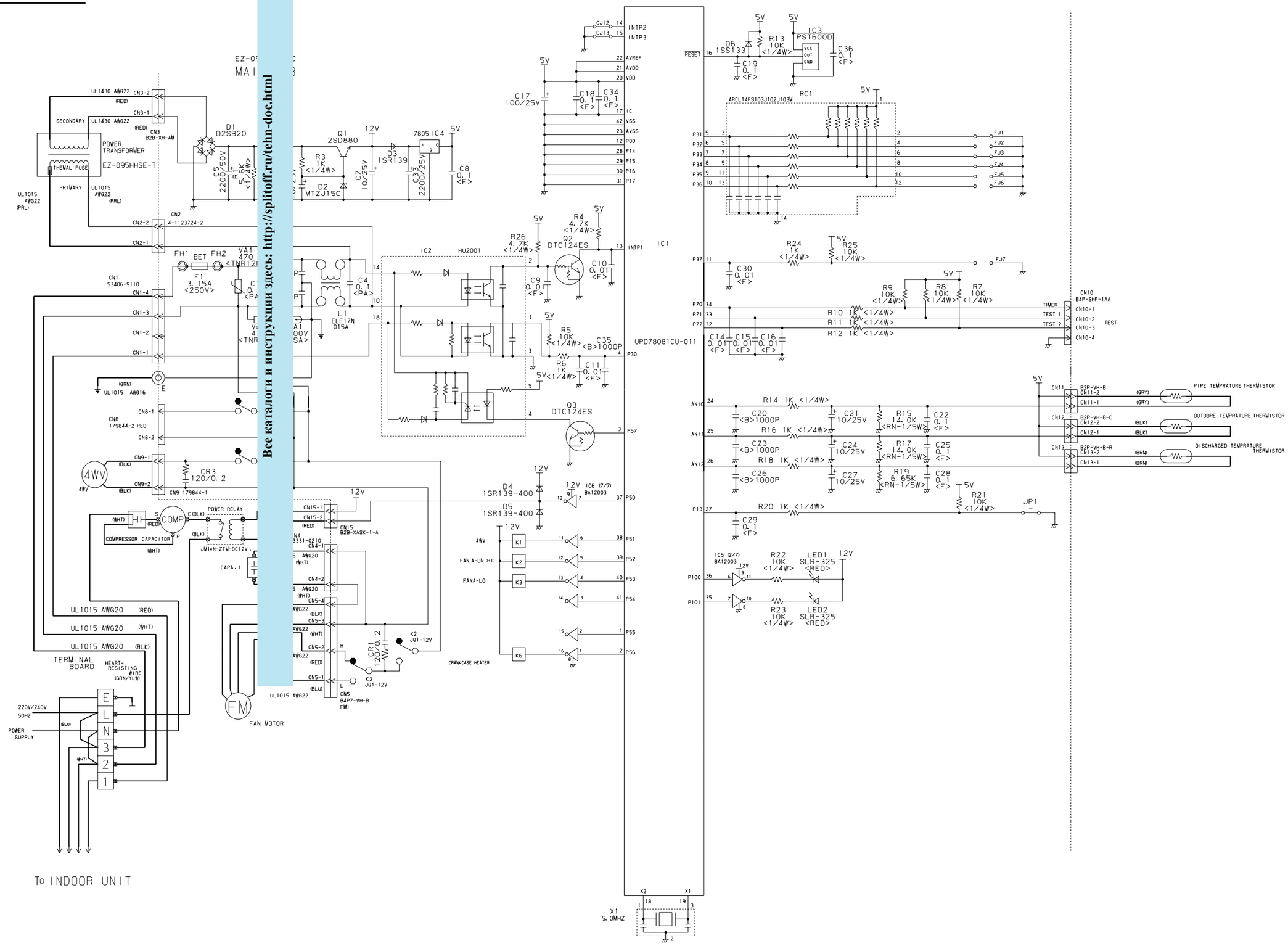

Все каталоги и инструкции здесь: http://splitoff.ru/tehn-doc.html

PRINTED CIRCUIT BOARD LAYOUTS

INDOOR UNIT

(Viewed from the solder side)

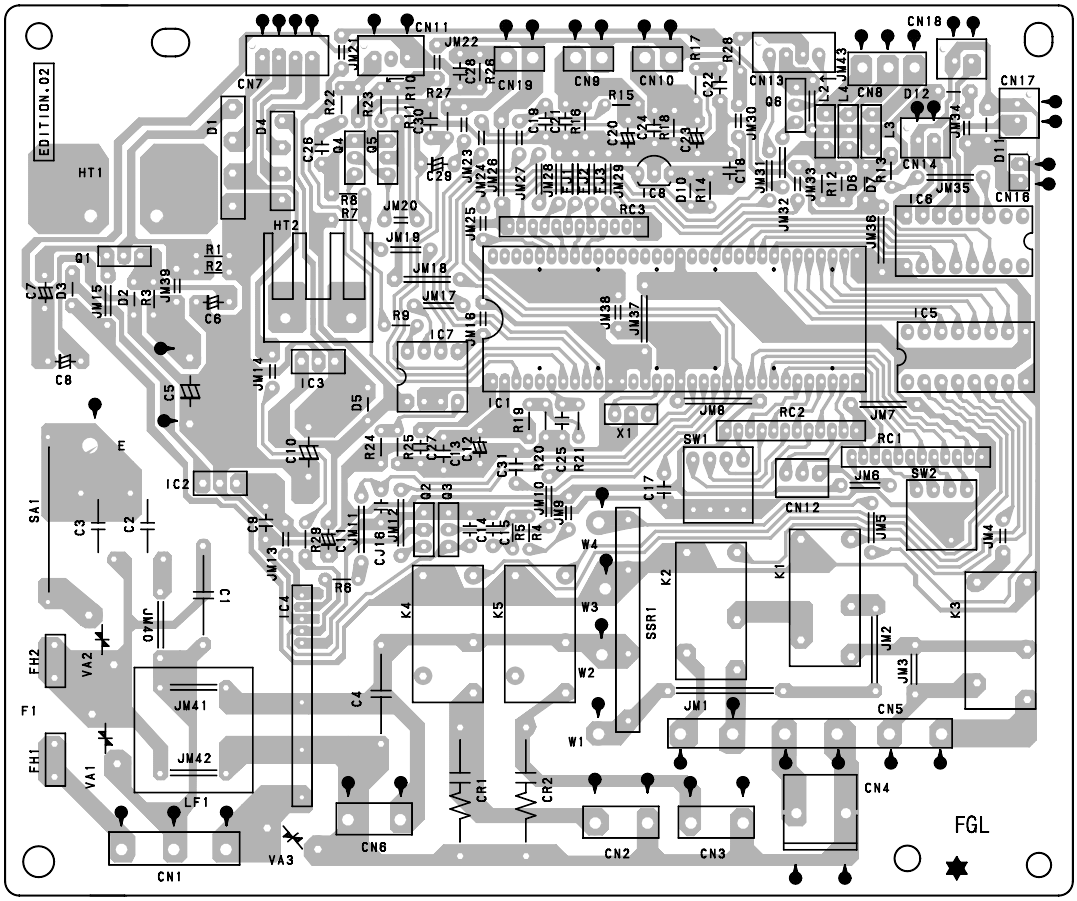

OUTDOOR UNIT

(Viewed from the solder side)

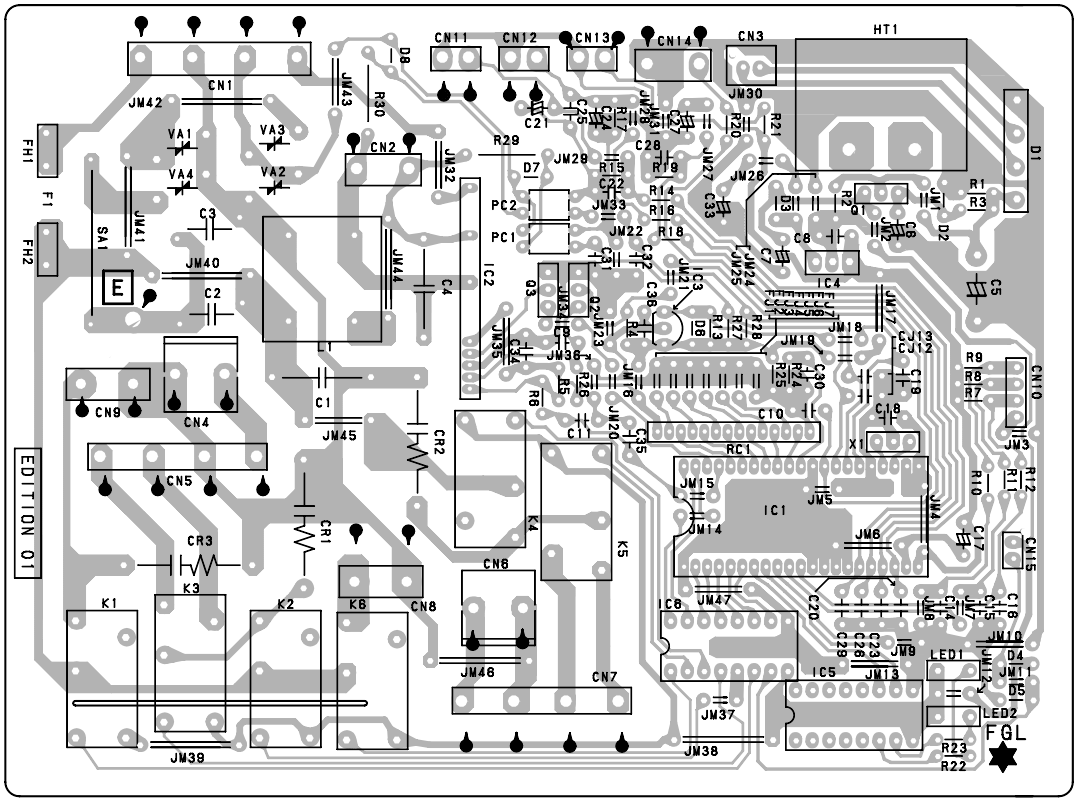

RELAY PCB ASSEMBLY

(Viewed from the solder side)

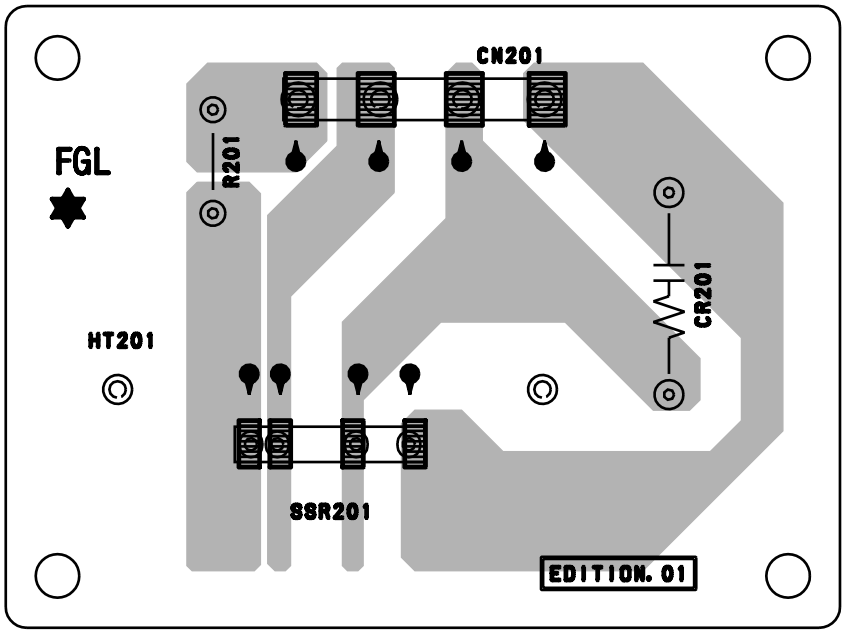

REFRIGERANT SYSTEM DIAGRAM

Models : ARY30ALA/AOY30ABJL

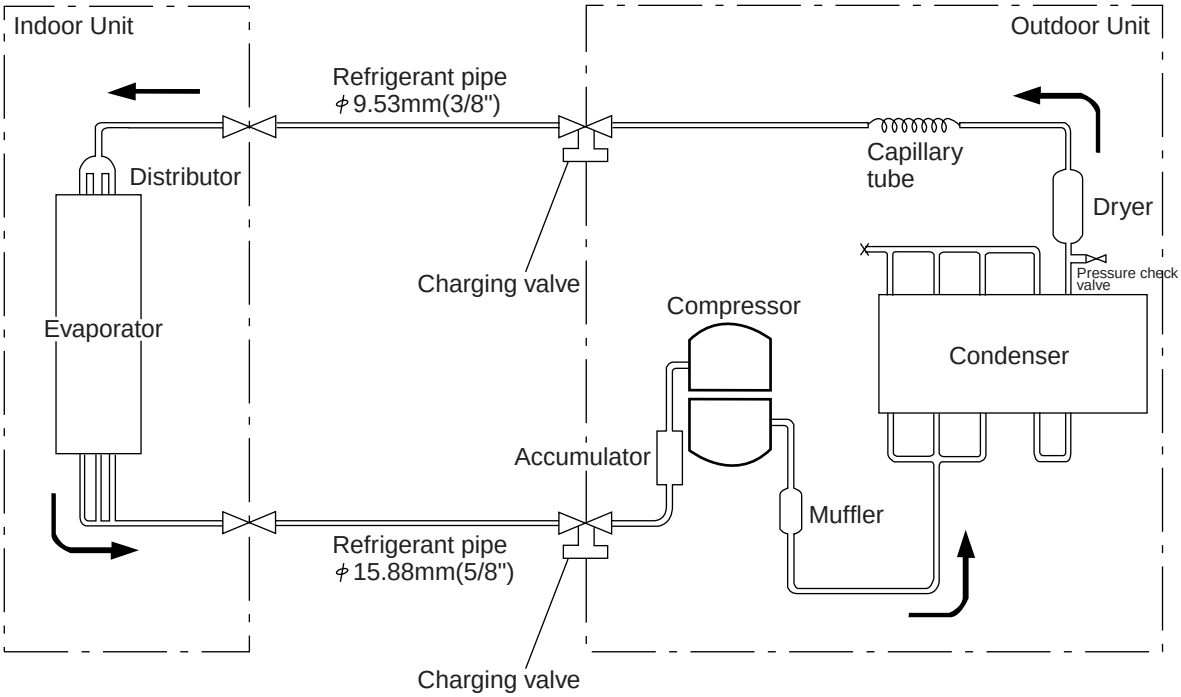

Models : ARY30RLA/AOY30RBJL

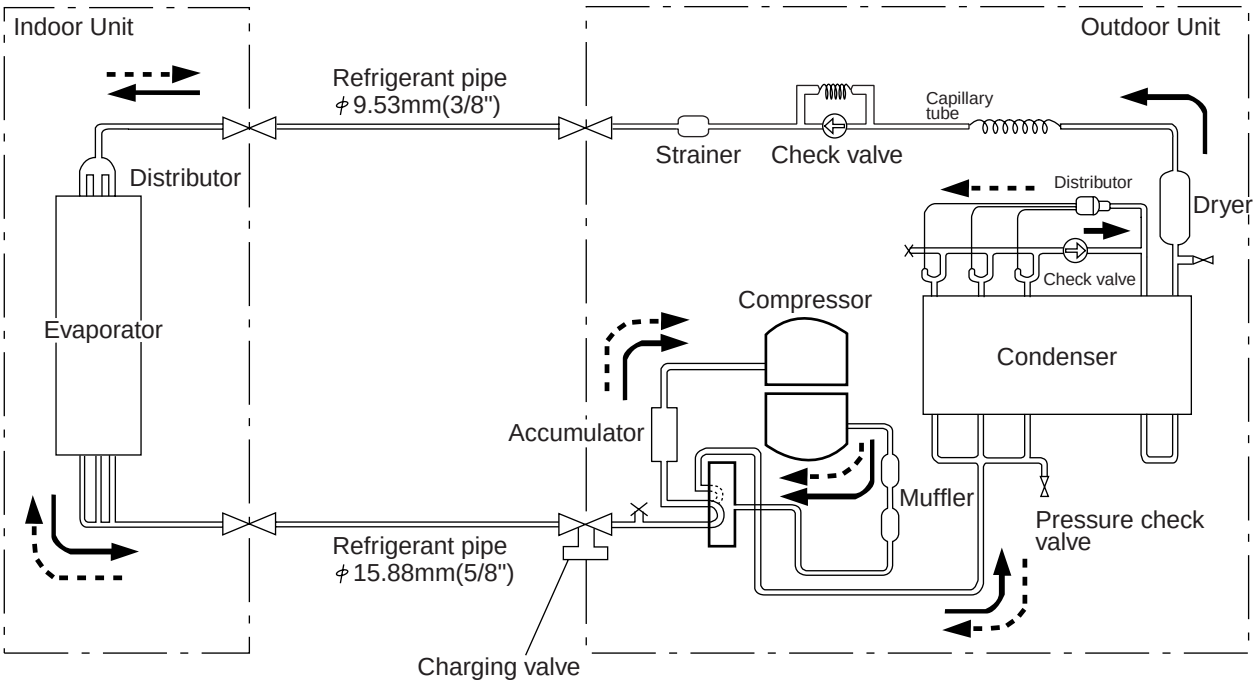

Cooling
Heating
: Flare coupling
Check Valve

DISASSEMBLY ILLUSTRATION

Models : AOY30ABJL

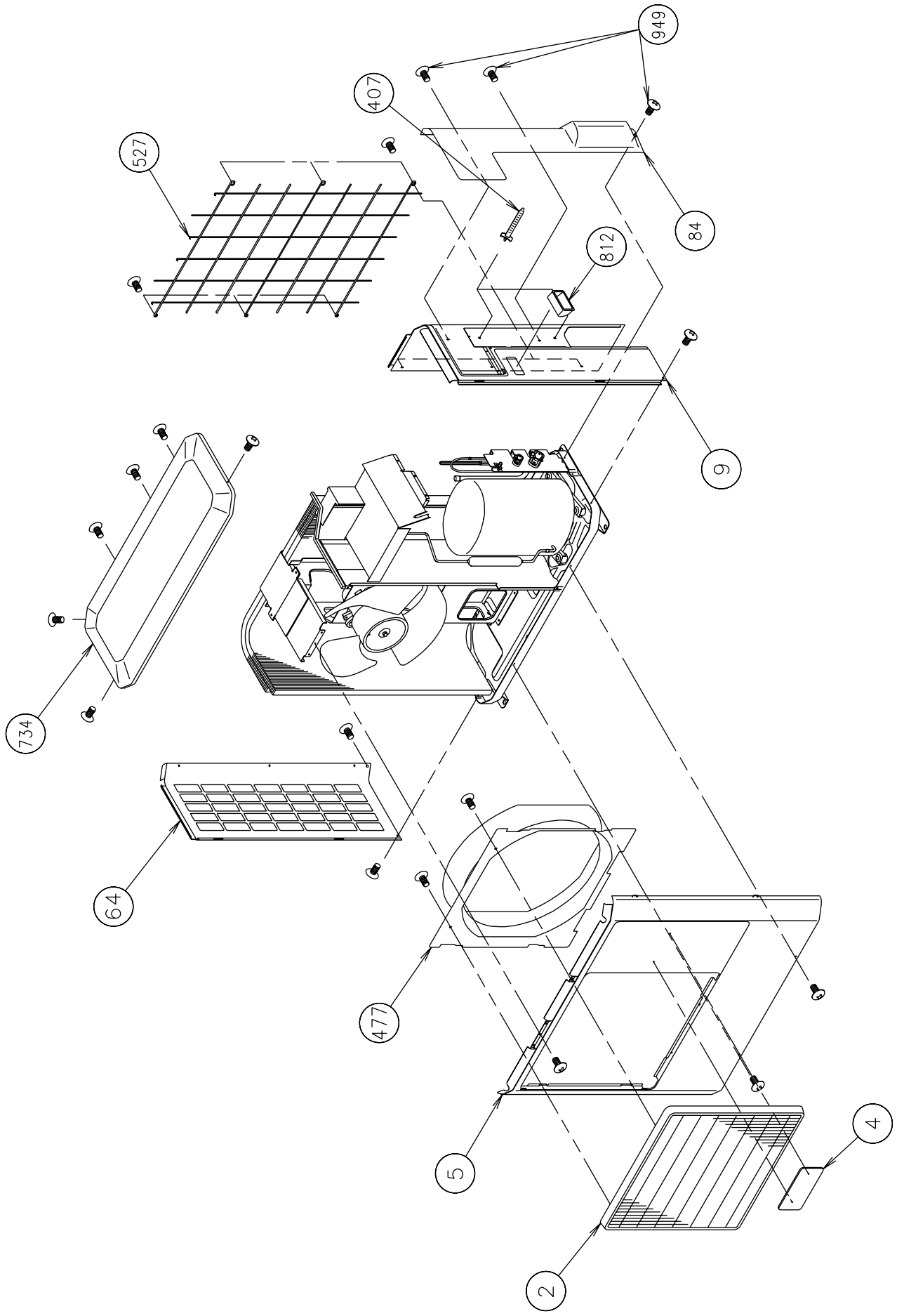

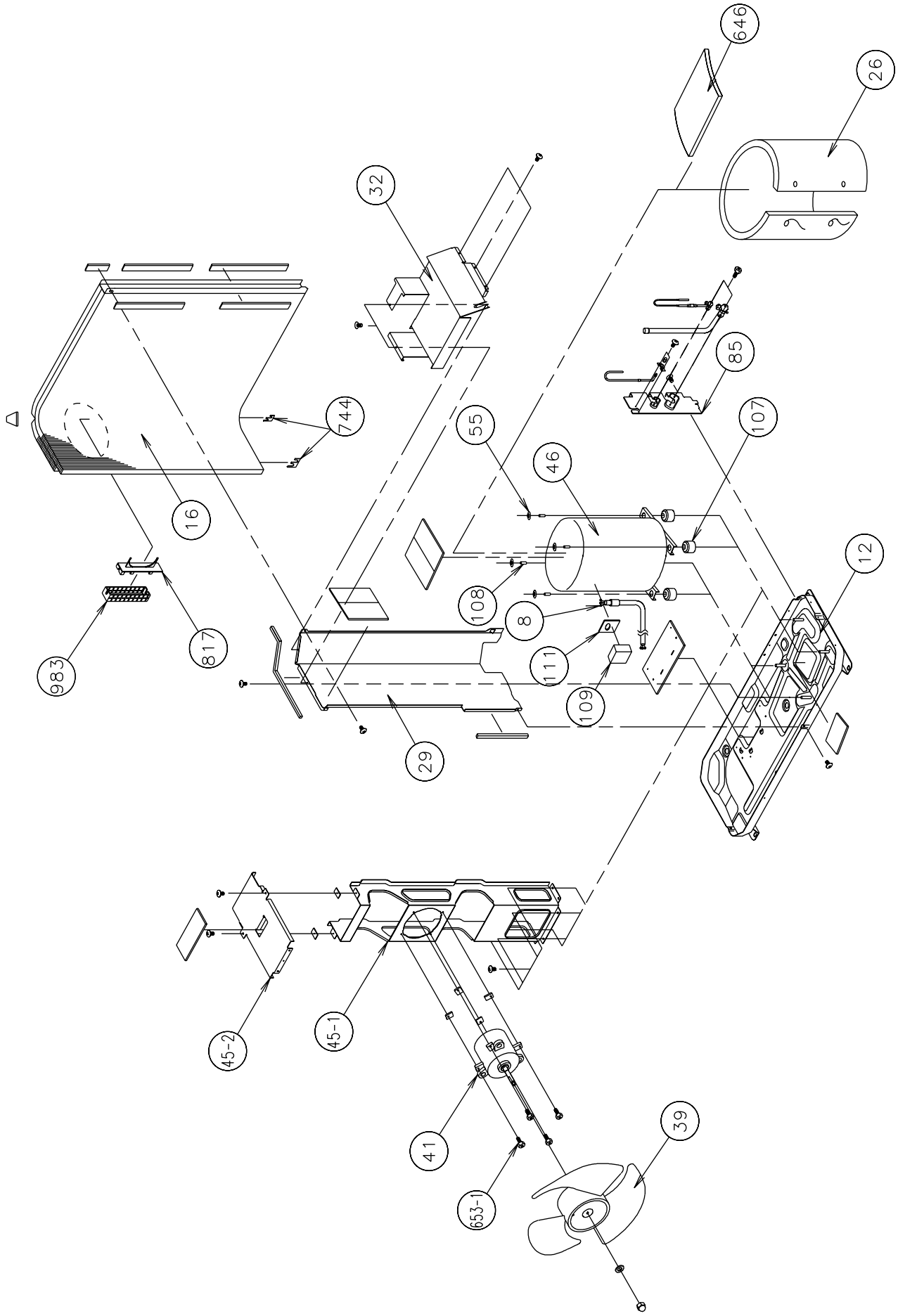
646
26
32
85
107
744
55
46
16
12
108
8
817
111
983
109
29
45-2
45-1
41
39
653-1

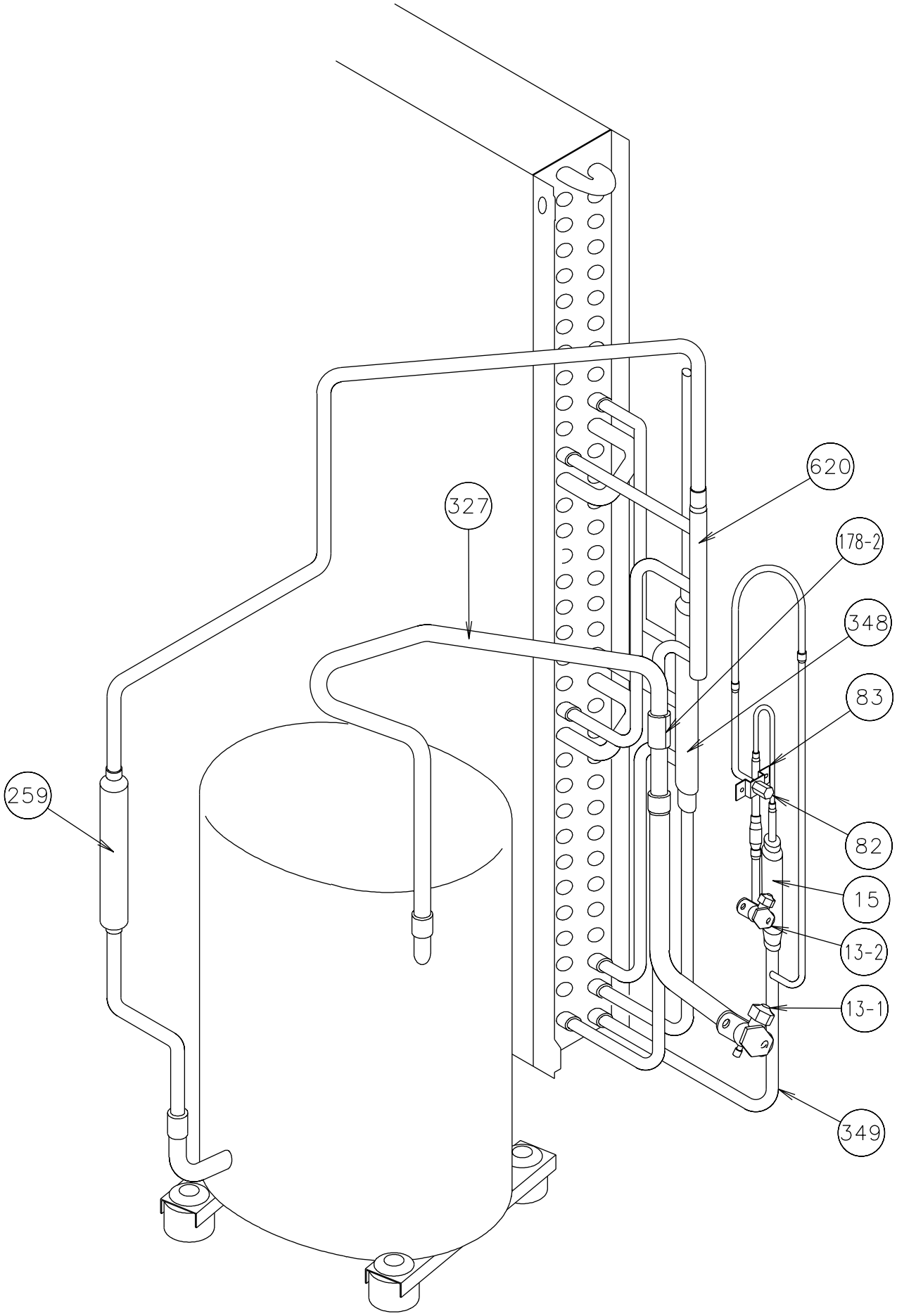
620
327
178-2
348
83
259
82
15
13-2
13-1
349

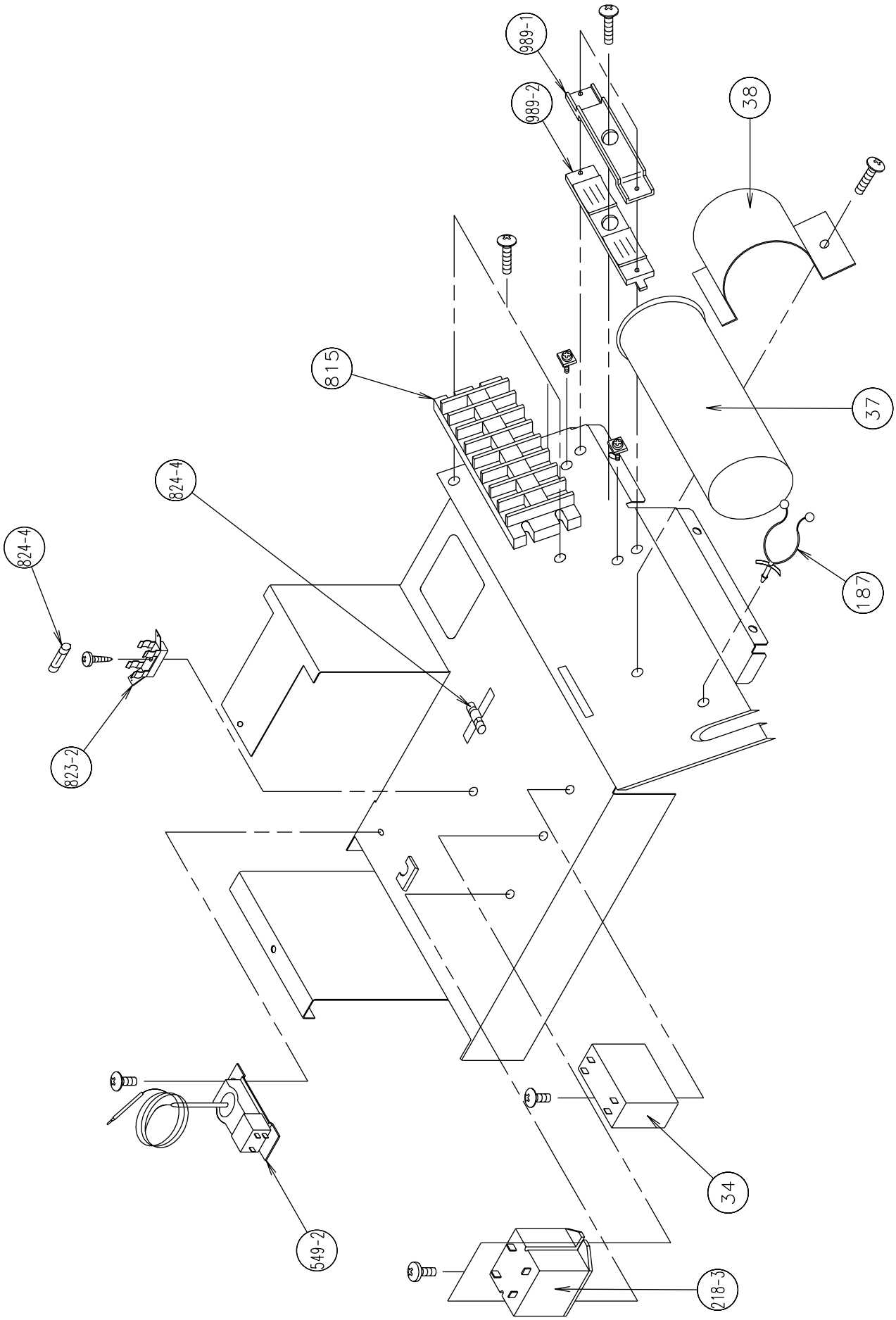
989-1
989-2
38
815
37
824-4
824-4
187
823-2
34
549-2
218-3

Models : AOY30RBJL

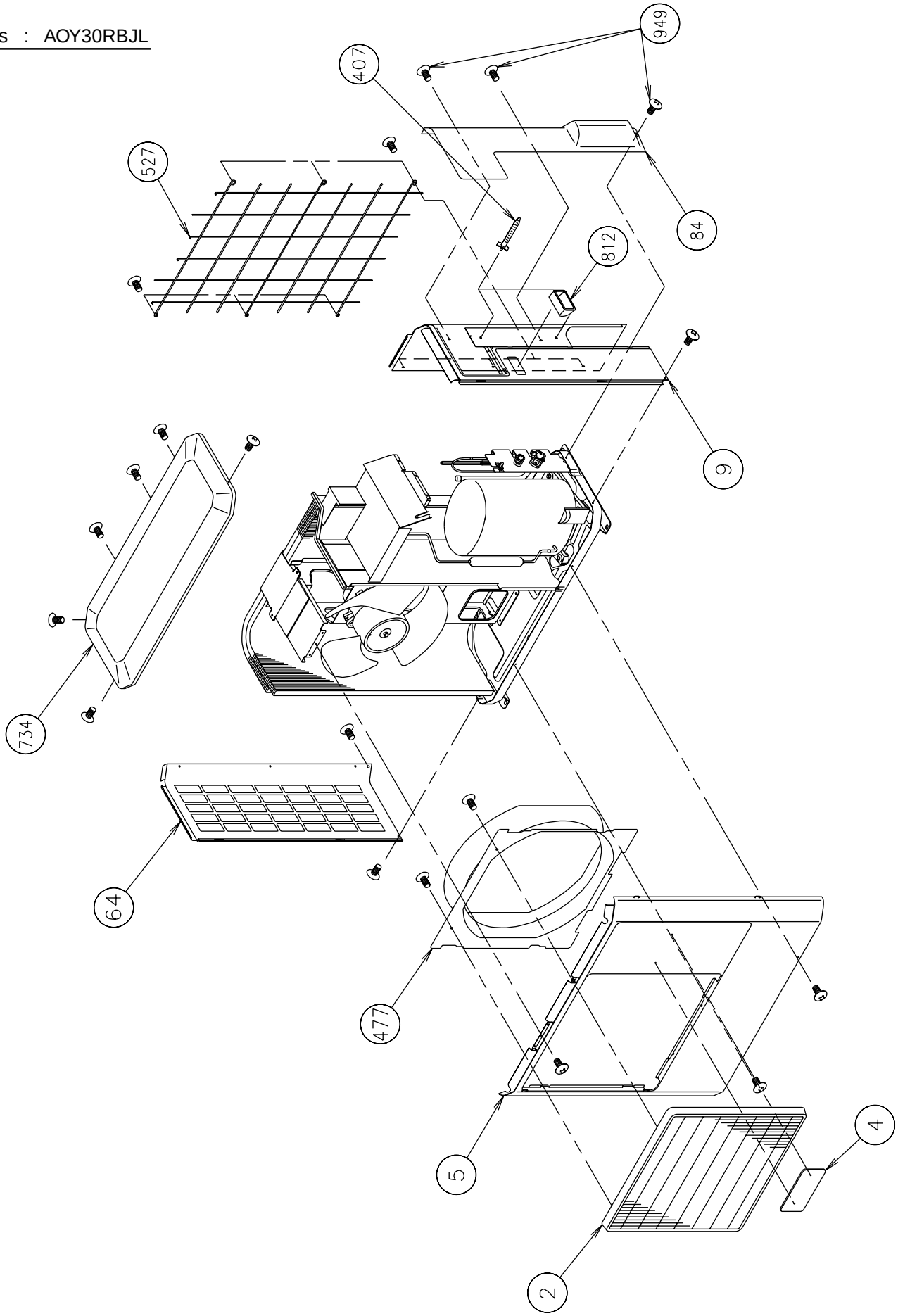

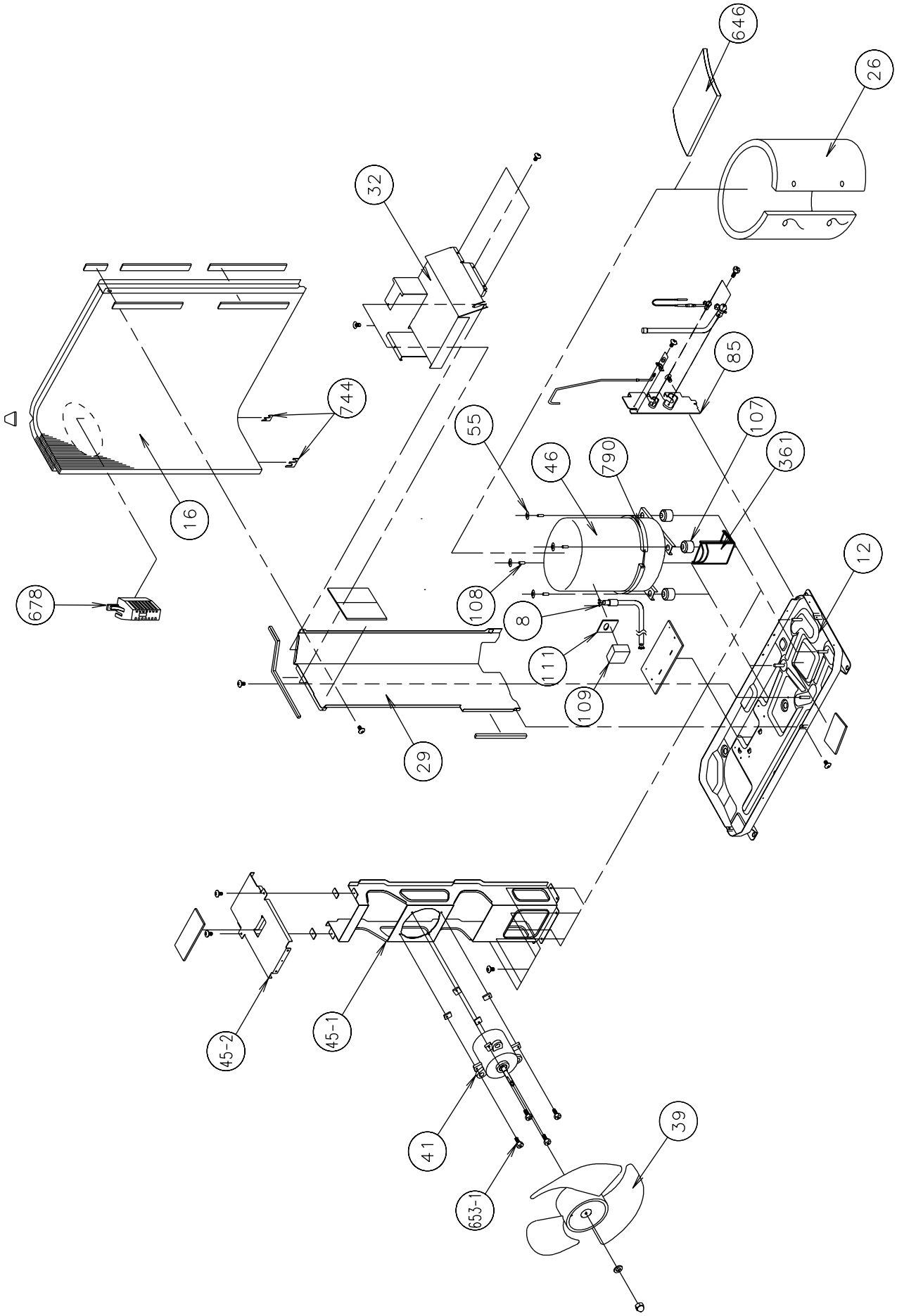
646
26
32
85
744
55
107
361
46
790
16
12
678
108
8
111
109
29
45-2
45-1
41
653-1
39

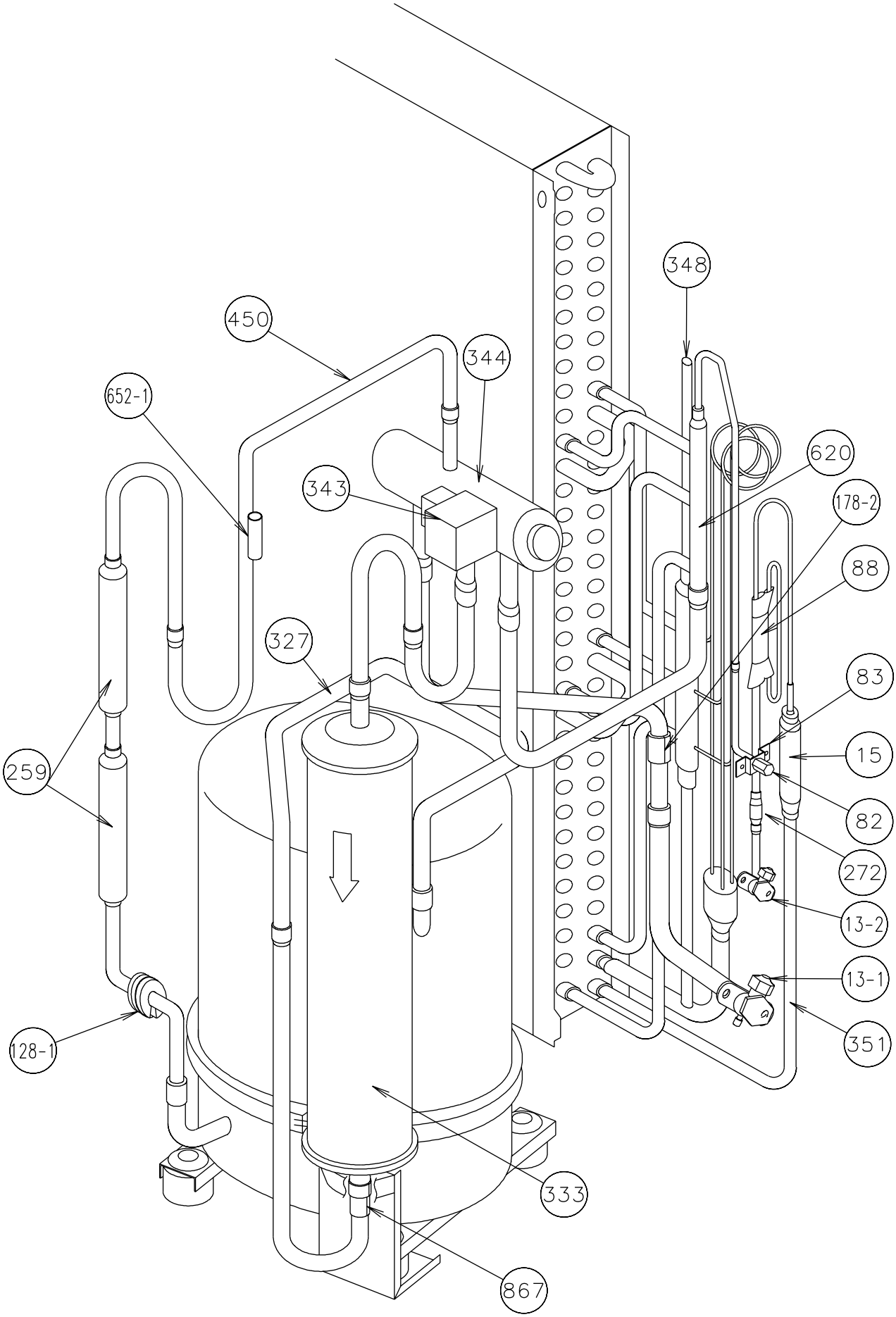
348
450
344
652-1
620
343
178-2
88
327
83
15
259
82
272
13-2
13-1
128-1
351
333
867

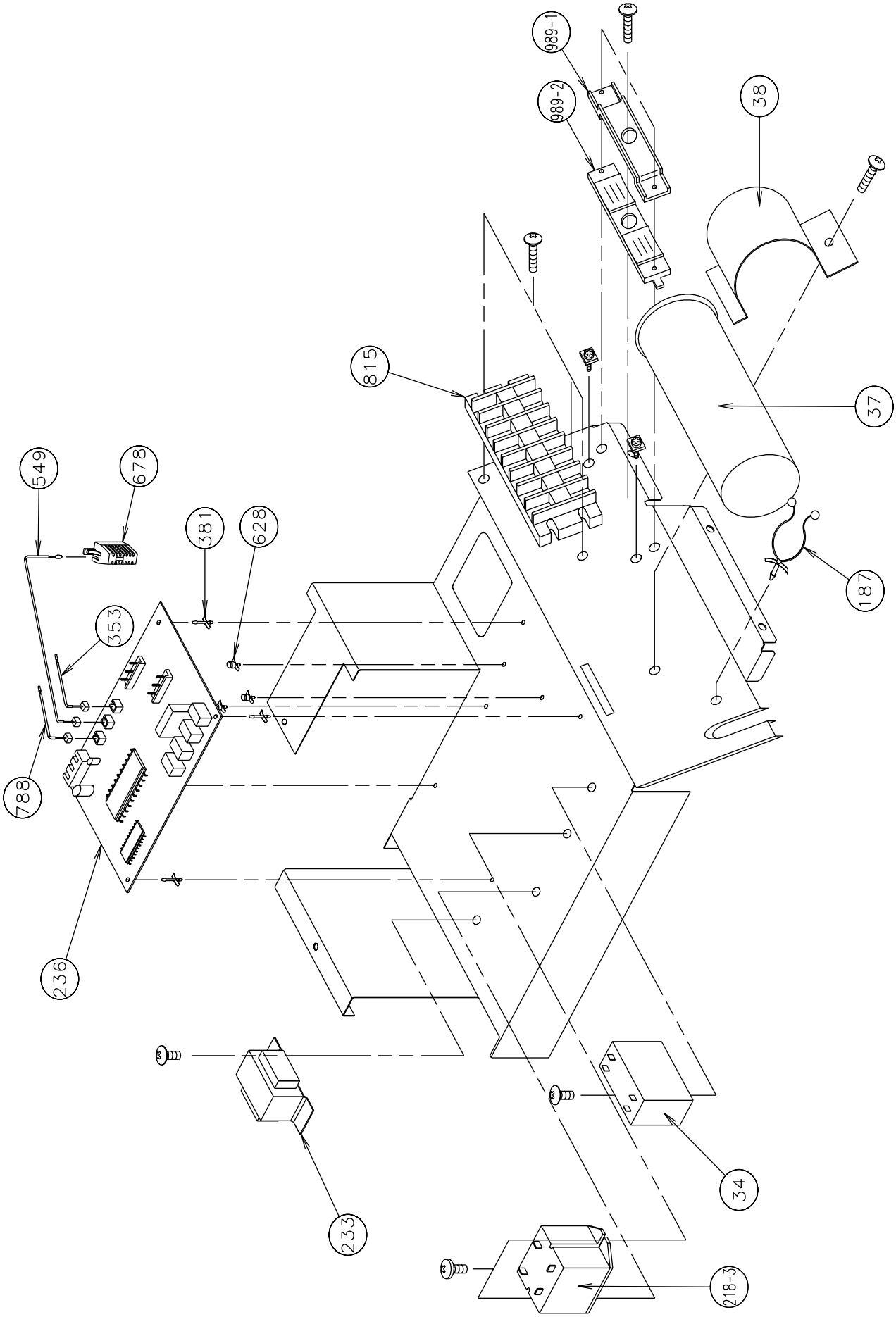
989-1
989-2
38
815
37
549
678
381
628
187
353
788
236
233
34
218-3

Models : ARY30ALA, ARY30RLA

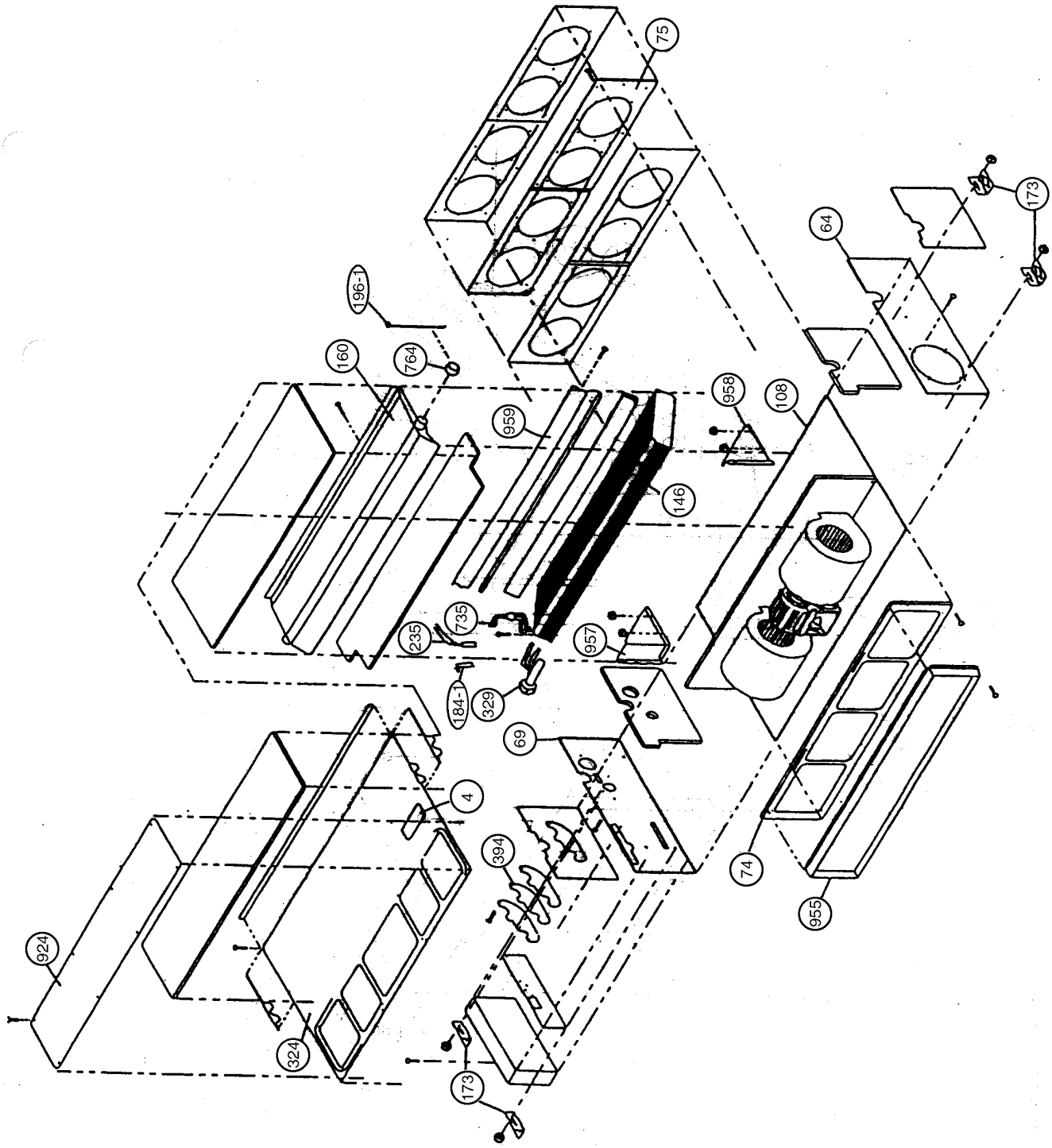

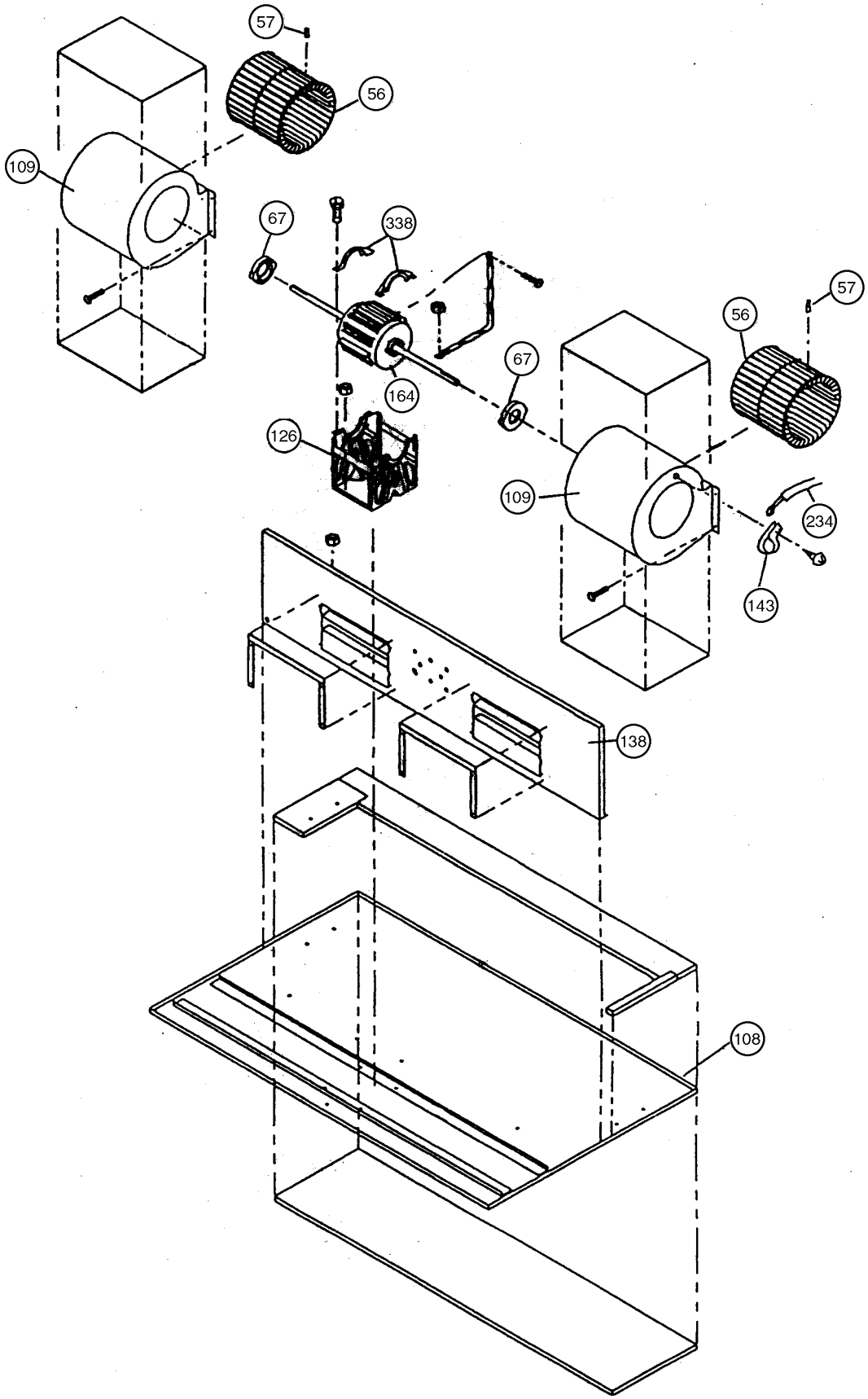
57
56
109
67
338
164
126
67
57
56
109
234
143
138
108

Models : ARY30ALA

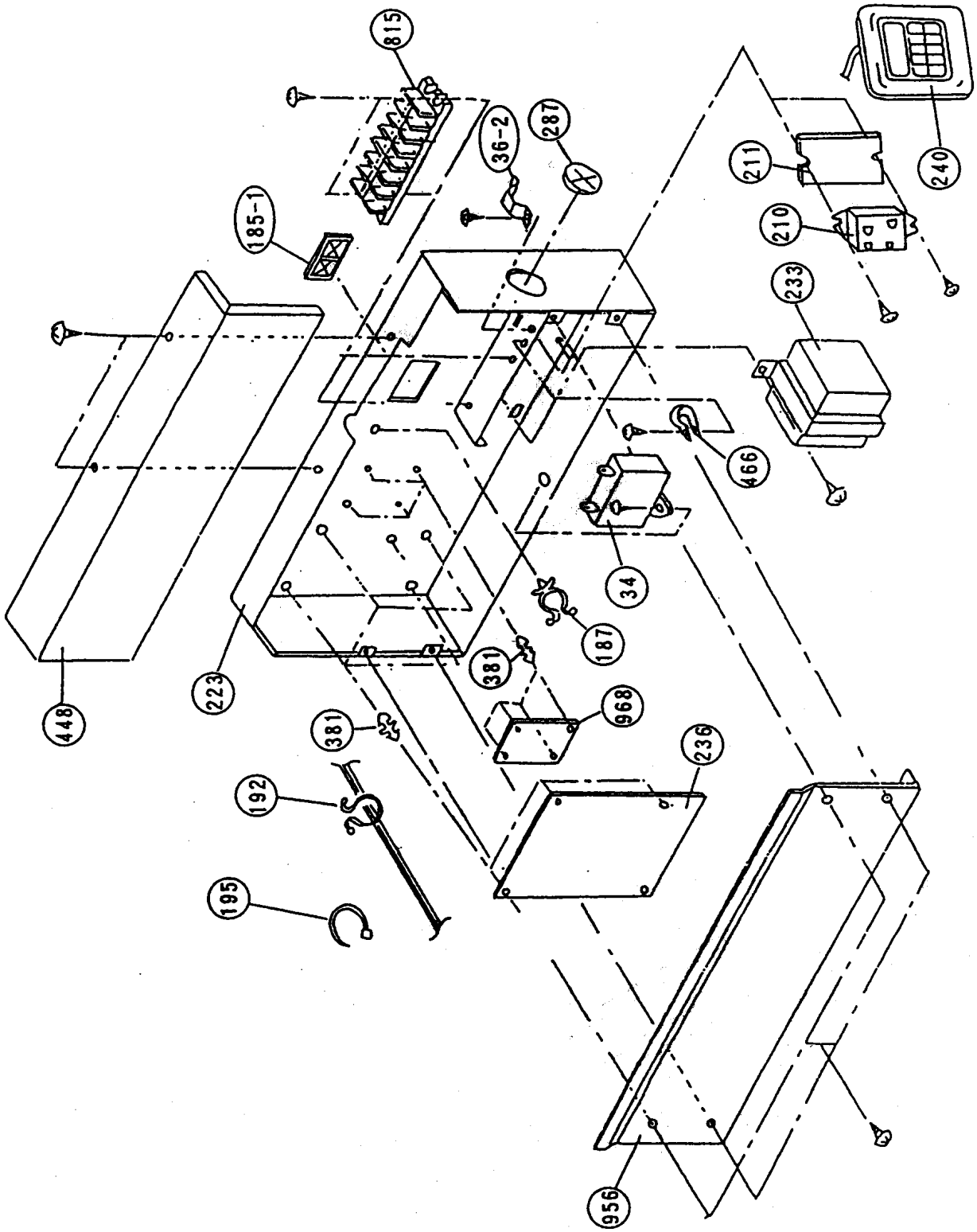

Models : ARY30RLA

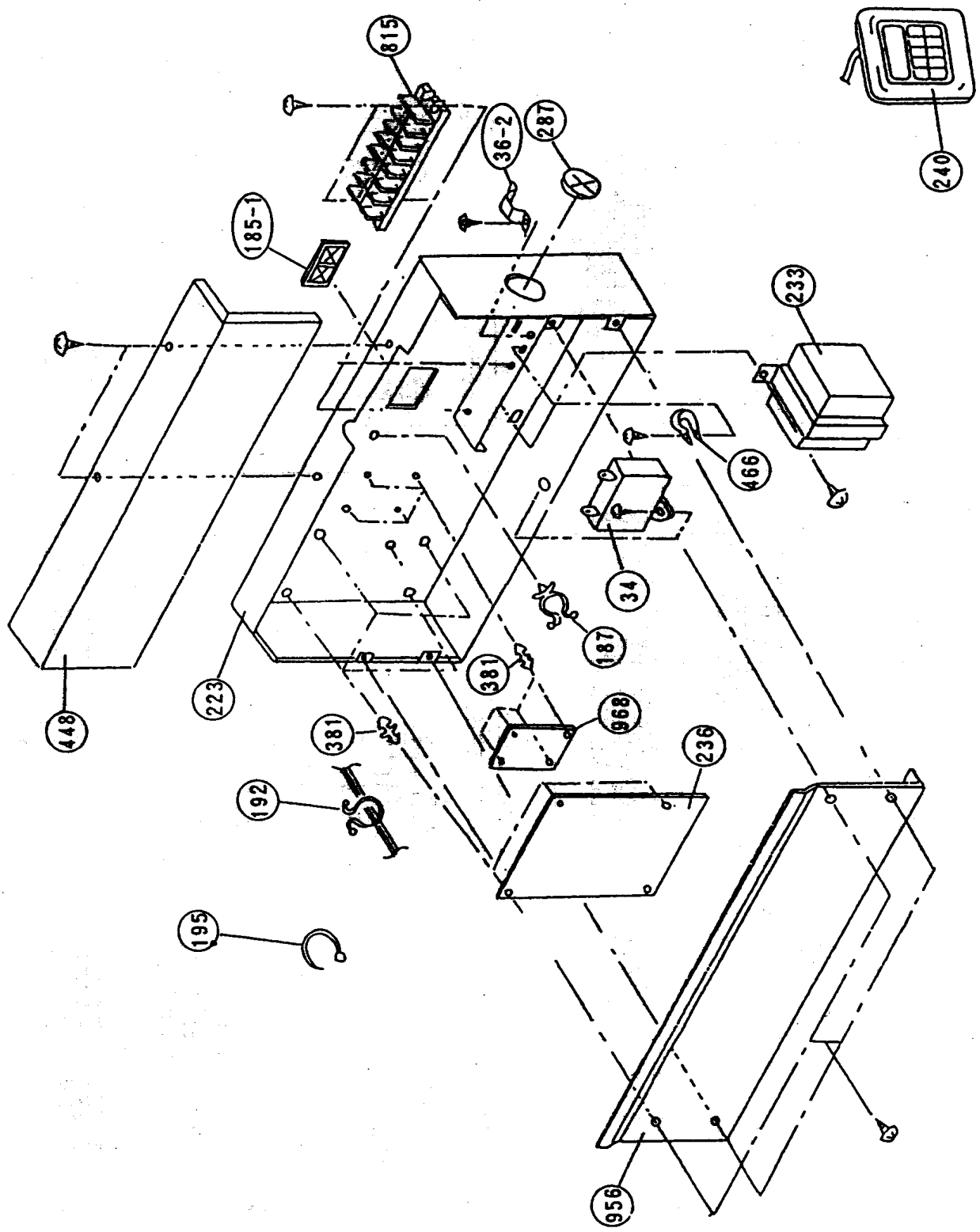

PARTS LIST

When you oeder parts, please make a photocopy of this page and fill the number of the parts in the "Order" column.

INDOOR UNIT

Ref. No.	Description	Part No.		Order Q" ty	Ref. No.	Description	Part No.		Order Q" ty
		ARY30ALA	ARY30RLA				ARY30ALA	ARY30RLA	
4	Emblem-Rear	9351355005	9351355005		211	Cushion Rubber	313806328306	——	
34	Capacitor (Fan Motor)	9700468035	9700468035		223	Control Box Metal Assy	9356558005	9356558005	
36-2	Cord Holder Metal	9356362008	9356362008		233	Power Transformer	9701678013	9701678013	
56	Sirocco Fan Assy	9356531022	9356531022		234	Thermistor Assy	9302745008	9302745008	
57	Hez. Socket Screw	313616213202	313616213202		235	Thermistor Assy-Pipe	9701329076	9701329076	
64	Cabinet-Left Metal	9356551006	9356551006		236	Controller PCB Assy	9701705106	9701705106	
67	Rubber (Vibration-proof)	313659068604	313659068604		240	Remote Control Unit	9701673032	9701673032	
69	Cabinet-Right Metal	9356547009	9356547009		287	Cap (Power)	9352173011	9352173011	
74	Intake Panel	9356537000	9356537000		324	Top Plate	9356546002	9356546002	
75	Outlet Panel Assy	9356538007	9356538007		329	Coupling Pipe Assy	9361547001	9361547001	
108	Base Assy	9356518009	9356518009		338	Motor Fixture	9356536003	9356536003	
109	Casing Assy	9356527001	9356527001		381	Locking Spacer	313209391506	313209391506	
126	Motor Fixing Table Assy	9356533002	9356533002		394	Pipe Fixing Plate	9356554007	9356554007	
138	Separate Wall	9356523003	9356523003		448	Control Box Metal-B	9356560008	9356560008	
143	Clamp NK-3N	313361274700	313361274700		466	Clamp NK-4N	313714328805	313714328805	
146	Evaporator Assy	9361548015	9361548015		735	Distributor Assy	9361543003	9361543003	
160	Drain Pan Assy	9356542028	9356542028		764	Drain Cap	9356541007	9356541007	
164	Fan Motor Assy	9600434024	9600434024		815	Terminal-7P	9358660102	9358660102	
173	Hanger Bracket	9356563009	9356563009		924	Intake Seal Plate	9356553000	9356553000	
184-1	Thermo. Spring-A	313728262708	313728262708		955	Square Flange Assy	9356555004	9356555004	
185-1	Rubber Bushing	9357376004	9357376004		956	Control Box Metal-E	9356900002	9356900002	
187	Clamp No. 1219	313361271706	313361271706		957	Eva. Fixing Plate-R	9356521009	9356521009	
192	Clamp No. 062	313361271402	313361271402		958	Eva. Fixing Plate-L	9356522006	9356522006	
195	Clamp SKB-100	313361275805	313361275805		959	Eva. Seal Plate	9356540000	9356540000	
196-1	Clamp SKB-3M	312300787605	312300787605		968	Relay PCB Assy	9701594030	9701594030	
210	Main Relay	9356781007	——						

OUTDOOR UNIT

Ref. No.	Description	Part No.		Order Q" ty	Ref. No.	Description	Part No.		Order Q" ty
		ARY30ALA	ARY30RLA				ARY30ALA	ARY30RLA	
2	Fan Cover	9359808015	9359808015		272	Strainer	——	9360147011	
4	Emblem-Rear	9359836018	9359836018		327	Suction Pipe-A	9360152008	9360152008	
5	Cabinet-A, Painted	9359797029	9359797029		332	Suction Pipe-E	9361052000	——	
8	Wire Assy(Shield)-D	9359901021	9359901021		333	Accumulator	9360183002	9360183002	
9	Cabinet-B, Painted	9359798026	9359798026		343	Solenoid Coil	——	9360538024	
12	Base Assy, Painted	9359812029	9359812029		344	4-Way Valve	——	9360195005	
13-1	3-Way Valve (5/8)	9360157003	9360157003		348	Outlet Pipe (Cond.) Assy	9360171009	9360131003	
13-2	3-Way Valve (3/8)	9360150004	9360150004		349	Outlet Pipe-E	9360174000	——	
15	Dryer	9353789006	9353789006		351	Outlet Pipe-F	——	9360158000	
16	Condenser Assy	9360280015	9360280015		353	Thermistor Assy-Pipe	——	9701330010	
26	Compressor Cover	9362501002	9362501002		361	Accumulator Support	9359843016	9359843016	
29	Separate Wall	9359804017	9359804017		381	Locking Spacer	——	313209391506	
32	Control Box Metal	9359839019	9359839019		401	Terminal	9701971015	——	
34	Capacitor (Fan Motor)	9357965024	9357965024		407	Clip (Cable) No. 1259	313739340109	313739340109	
37	Running Capacitor	9357211077	9357211077		450	Discharge Pipe-A Assy	9360166005	9360166005	
38	Capacitor Clamp	9360610010	9360610010		477	Bell Mouth	9359809012	9359809012	
39	Propeller Fan Assy	9359837015	9359837015		527	Protection Net	9359844013	9359844013	
41	Fan Motor Assy-Out	9600266045	9600266045		549	Thermostat Assy-Outer	——	9357328027	
45-1	Motor Bracket Metal	9359801016	9359801016		620	Inlet Pipe (Cond.) Assy	9360167002	9360126009	
45-2	Motor Bracket Top Metal	9359803010	9359803010		628	Locking Spacer-B	——	313005446558	
46	Compressor Assy	9360613011	9360613011		646	Compressor Cover-B	9353368003	9353368003	
55	Special Nut M8 (For Comp.)	313252257701	313252257701		652-1	Thermistor Holder Pipe	——	313806262805	
64	Cabinet-Left	9359840022	9359840022		653-1	Bolt (Fan Motor Fixing)	0700156014	0700156014	
82	Check Joint Assy	9360762009	9360762009		678	Bracket (Thermistor)	——	313557406106	
83	Check Joint Bracket	9359807018	9359807018		734	Cabinet Top Plate	9359799023	9359799023	
84	Valve Cover	9359817017	9359817017		744	Clamp (Condenser)	313166374106	313166374106	
85	Valve Fixing Plate	9359806011	9359806011		788	Thermistor-Discharge	——	9358337011	
88	Restrictor Valve	——	9360146007		790	Belt Heater	9361140035	9361140035	
107	Rubber Seat-A (For Comp.)	313102081406	313102081406		812	Grip	9352157004	9352157004	
108	Sleeve-A (For Comp.)	313696081700	313696081700		815	Terminal-8P	9356484052	9356484052	
109	Terminal Cover (For Comp.)	9352456022	9352456022		817	Thermostat Fixture	9352164019	——	
111	Terminal Packing (For Comp.)	9352456039	9352456039		823-2	Fuse Holder	0500063024	——	
128-1	Rubber (Discharge Pipe)	——	313155086308		824-4	Fuse	0600222529	——	
178-2	Capillary Holder Rubber	313394274808	313394274808		846	Relay	——	9357058009	
187	Clamp No. 1219	313361271706	313361271706		867	Accumulator Holder Rubber	9354022010	9354022010	
218-2	Power Relay	9351553012	——		949	Screw, Painted White	9305648009	9305648009	
218-3	Power Relay	9353619006	——		983	Thermostat Cover	9358274002	——	
233	Power Transformer	——	9701549016		989-1	Cord Clamp-A	9359822011	9359822011	
236	Controller PCB Assy	——	9702834012		989-2	Cord Clamp-B	9359823018	9359823018	
259	Muffler								

[INDOOR UNIT P. C. B.]
CONTROLLER PCB ASSEMBLY (Ref. No. 236)

When you oeder parts, please make a photocopy of this page and fill the number of the parts in the "Order" column.

Ref. No.	Description	Part No.	Order Q" ty	Ref. No.	Description	Part No.	Order Q" ty
IC1	IC μPD78011FCW-013	9701722013		C9,13,17, 18,21,24	Cap. Ceramic 0.1μF	0300988251	
IC2	IC NJM7805FA	0100462081		C10	Cap. Elec. 35V 2200μF	0300915042	
IC3	IC NJM7812FA	0100462104		C12	Cap. Elec. 25V 100μF	0300051375	
IC4	IC HI2002	9701384020		C14,15,26, 27,CJ16	Cap. Ceramic 50V 0.01μF	0300013113	
IC5,6	IC BA12003	0101650012		C19,22,25, 30	Cap. Ceramic 50V 1000pF	0300011096	
IC7	IC BA10358	0101854014		F1	Fuse BET 4A - 250V	0600222543	
IC8	IC PST600D-2-TP	0101461113		FH1,2	Fuse Holder PFC5000-0502	0500158072	
RC1-3	RC Module ARCL12FS	0200301013		VA1,2,3	Varistor TNR12G471K	0000038010	
Q1	Xstr 2SD880	0000001014		SA1	Arrestor DSA-362MA-05	0600168032	
Q2,3,6	Xstr DTC124ES	0000517010		K1,2,3,5	Relay JQ1-12V	9701316014	
Q4,5	Xstr 2SC1815	0000002011		CR2	Network RPEL-121204	9701125012	
D1	Diode D2SB20	0000599023		SW1	Switch, Slide DSS804	9701393015	
D2	Diode MTZJ15C	0000852203		SW2	Switch, Rotary DRS4016-3	9701694013	
D3,11,12	Diode 1SR139-400	0000353137		HT1	Heat Sink PUG26-25	9701428014	
D4	Diode S1VB20	0000292054		HT2	Heat Sink B.PUE-16	9701376018	
D5-7,10	Diode 1SS133	0000572019		X1	X' tal Resonator EFOEC8384T4	9701261017	
R1,2	Res. Carbon 5.6kΩ±5%	0200994192		L2-4	EMI Filter EXCEMT103DT	0400406396	
R3,15,17 22,27	Res. Carbon 1kΩ±5%	0200994017		CN1	Plug, PCB 53406-9910 (ARY30ALA)	0500951048	
R4,6, 10-12,14 19-21,23, 26,29	Res. Carbon 10kΩ±5%	0200994253		CN1	Plug, PCB 53406-9210 (ARY30RLA)	0500951062	
R5,13,28	Res. Carbon 300Ω±5%	0200993874		CN3	Plug, PCB B2P3-VH-B-C	0500011773	
R7	Res.Metal 15.4kΩ±1%	0201028759		CN4	Plug, PCB 53331-0210	0501033019	
R8	Res.Metal 28.0kΩ±1%	0201028742		CN5	Plug, PCB 5430C063	0500957026	
R9	Res.Carbon 4.7kΩ±5%	0200994178		CN6	Plug, PCB B2P3-VH-B-R	0500011766	
R16	Res.Metal 3.32kΩ±1%	0201028568		CN7,13	Plug, PCB B4B-XH-AM	0500005314	
R18	Res.Metal 10.5kΩ±1%	0201028537		CN8	Plug, PCB 53405-0310	0500940035	
R24	Res.Metal 22.1kΩ±1%	0201028513		CN9	Plug, PCB B2P-VH-B	0500011124	
R25	Res.Metal 33.2kΩ±1%	0201028544		CN10	Plug, PCB B2P-VH-B-C	0500011568	
C1,4	Cap. Plastic 250V 0.1μF	0300894835		CN11	Plug, PCB B3B-XH-AM	0500005338	
C2,3	Cap. Ceramic 50V 4700pF	0300727546		CN12	Plug, PCB B3P-SHF-1AA	0500006021	
C5	Cap. Elec. 50V 2200μF	0301206026		CN16	Plug, PCB B2B-XASK-1-A (ARY30ALA)	0501045012	
C6	Cap. Elec. 50V 10μF	0300003145		E	Wire w/Terminal GRN L=300	9701755011	
C7,11,20, 23	Cap. Elec. 25V 10μF	0300004258					
C8	Cap. Elec. 25V 2200μF	0300915417					

[OUTDOOR UNIT P. C. B.]
CONTROLLER PCB ASSEMBLY (Ref. No. 236)

Ref. No.	Description	Part No.	Order Q" ty	Ref. No.	Description	Part No.	Order Q" ty
IC1	IC μPD78081CU-011	9701721016		C9-11,14-16, 30	Cap. Ceramic 50V 0.01μF	0300013113	
IC2	IC HU2001	9701651016		C17	Cap. Elec. 25V 100μF	0300051375	
IC3	IC PCT600D-2-TP	0101461113		C20,23,26,35	Cap. Ceramic 50V 1000pF	0300011096	
IC4	IC NJM7805FA	0100462081		C33	Cap. Elec. 25V 2200μF	0300915417	
IC5,6	IC BA12003	0101650012		F1	Fuse BET 3.15A - 250V	0600222512	
RC1	RC Module ARCL14FS	0200301020		FH1,2	Fuse Holder PFC5000-0502	0500158072	
Q1	Xstr 2SD880	0000001014		SA1	Arrestor DSA-362MA-05	0600168032	
Q2,3	Xstr DTC124ES	0000517010		K1-3,6	Relay JQ1-12V	9701316014	
D1	Diode D2SB20	0000599023		CR1,3	Network RPEL-121204	9701125012	
D2	Diode MTZJ15C	0000852203		L1	EMI Filter SU16V - 15030	0400134114	
D3-5	Diode 1SR139-400	0000353137		VA1,4	Varistor TNR12G471K	0000038010	
D6	Diode 1SS133	0000572019		HT1	Heat Sink PUG26-25	9701428014	
LED1,2	Diode SLR-325VC	0000813259		X1	X' tal Resonator EFOEC5004T	9701261024	
R1,2	Res. Carbon 5.6kΩ±5%	0200994192		CN1	Plug, PCB 53406-9110	0500951086	
R3,6,10-12 14,16,18, 20,24	Res. Carbon 1kΩ±5%	0200994017		CN2	Plug, PCB B2P3-VH-B-R	0500011766	
				CN3	Plug, PCB B2B-XH-AM	0500005321	
R4,26	Res. Carbon 4.7kΩ±5%	0200994178		CN4	Plug, PCB 53331-0210	0501033019	
R5,7-9,13, 21-23,25	Res. Carbon 10kΩ±5%	0200994253		CN5	Plug, PCB B4P7-VH-B	0500011742	
				CN8	Plug, PCB 179844-2	0501121020	
R15,17	Res.Metal 14kΩ±1%	0201028612		CN9	Plug, PCB 179844-1	0501121013	
R19	Res.Metal 6.65kΩ±1%	0201028766		CN10	Plug, PCB B4P-SHF-1AA	0500006038	
C1,4	Cap. Plastic 250V 0.1μF	0300894835		CN11	Plug, PCB B2P-VH-B	0500011124	
C2,3	Cap. Ceramic 50V 4700pF	0300727546		CN12	Plug, PCB B2B-VH-B-C	0500011568	
C5	Cap. Elec. 50V 2200μF	0301206026		CN13	Plug, PCB B2B-VH-B-R	0500011148	
C6,7,21,24, 27	Cap. Elec. 25V 10μF	0300004258		CN15	Plug, PCB B2B-XASK-1-A	0501045012	
C8,18,19,22, 25,28,29, 34,36	Cap. Ceramic 0.1μF	0300988251		E	Wire w/Terminal L=210	9701325016	

[INDOOR UNIT P. C. B.]
CONTROLLER PCB ASSEMBLY (Ref. No. 236)

Ref. No.	Description	Part No.	Order Q" ty
HT201	Heat Sink OSH-4730C-SP	9701754014	
SSR201	Relay S202SE2	9701719013	
CR201	CR Absorber RPEL-121204	9701125012	
CN201	Plug, PCB B4P7-VH-B	0500011742	
R201	Res. Carbon 1/2W 680Ω±5%	0200012681	

INDOOR UNIT ACCESSORIES

Name and Shape	Q'ty	Application	ARY30ALA	ARY30RLA
Installation template	1	For positioning the indoor unit	9357036007	9357036007
Hanger	4	For suspending the indoor unit from ceiling	9356563009	9356563009
Special nut A (large filange)	4	For suspending the indoor unit from ceiling	313005446653	313005446653
Special nut B (small filange)	4		313005446759	313005446759
Coupler heat insulation (large)	2	For indoor side pipe joint (large pipe)	9350716029	9350716029
Coupler heat insulation (small)	1	For indoor side pipe joint (small pipe)	9352766015	9352766015
Nylon fastener	1	For fixing the drain hose	312300787605	312300787605
Remote control unit	1		9701673032	9701673032
Remote control unit cord clamp	10	For instaling the remote control unit cord	313714181904	313714181904
Tapping screw (flush heads)	10	For instaling the remote control unit cord clamp	301141153027	301141153027
Auxiliary pipe assembly	1	For wiring conduit(gas side) connection	9356995022	9356995022
Drain hose insulation	1	Insulates the drain hose and vinyl hose connection	313806217708	313806217708

Name and Shape	Q'ty	Application	ARY30ALA	ARY30RLA
Cap (drain)	2	For outdoor unit drain piping work.	———	313166024302
Hexagon wrench	1	For opening the refrigerant valve on the outdoor unit.	9351228019	9351228019
Cable clip	2	For power cord binding.	313739340109	313739340109
Tapping screw (painted)	1	For fixing the valve cover.	9305648009	9305648009
Drain pipe	1	For outdoor unit drain piping work.	———	9303029015

splitoff.ru

Большая библиотека технической документации
http://splitoff.ru/tehn-doc.html
каталоги, инструкции, сервисные мануалы, схемы.